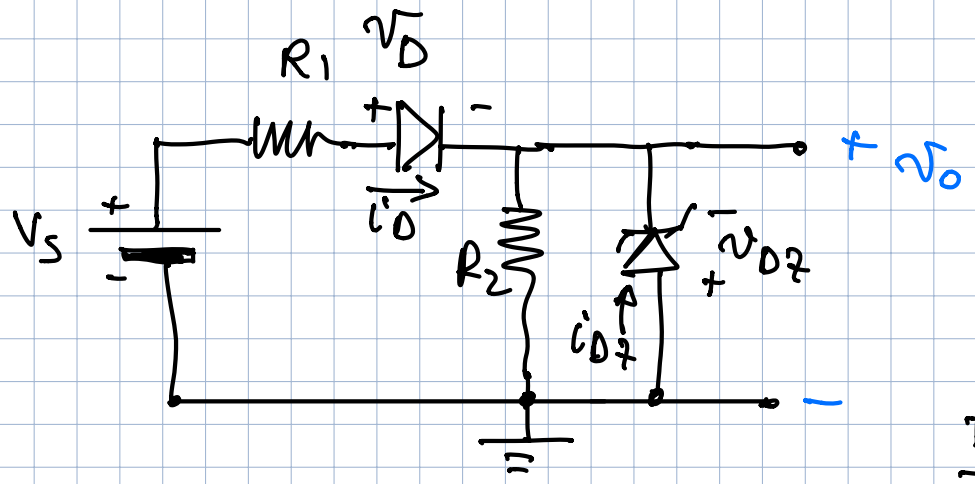

$R_1 = 1K\Omega$

$R_2 = 3K\Omega$

$V_{ON} = 1V$

$V_Z = 7.5V$

TROVARE $v_o = f(v_s)$

HP DIODI OFF

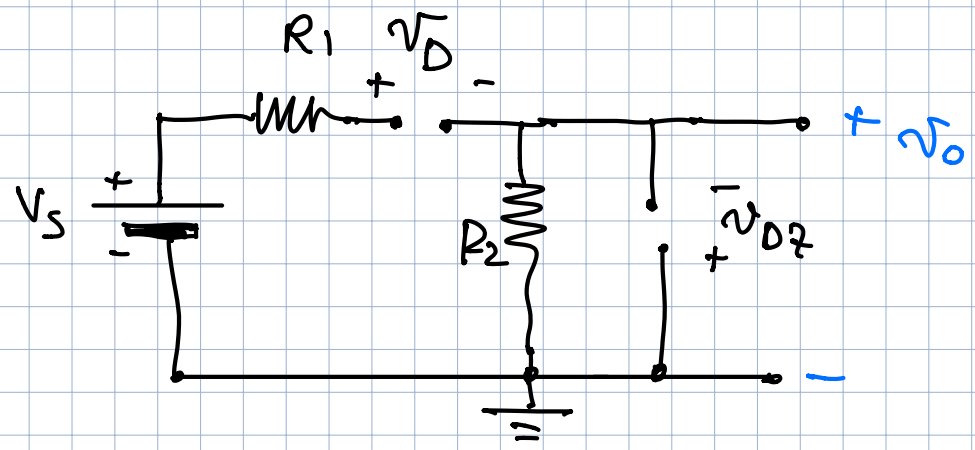

$v_o = 0$

$v_D = v_S$

$v_{DZ} = 0$

CON $\underbrace{v_D < V_{ON}}_{V_{TH1}}$ ALLORA D = OFF e DZ = OFF

e $v_o = 0$

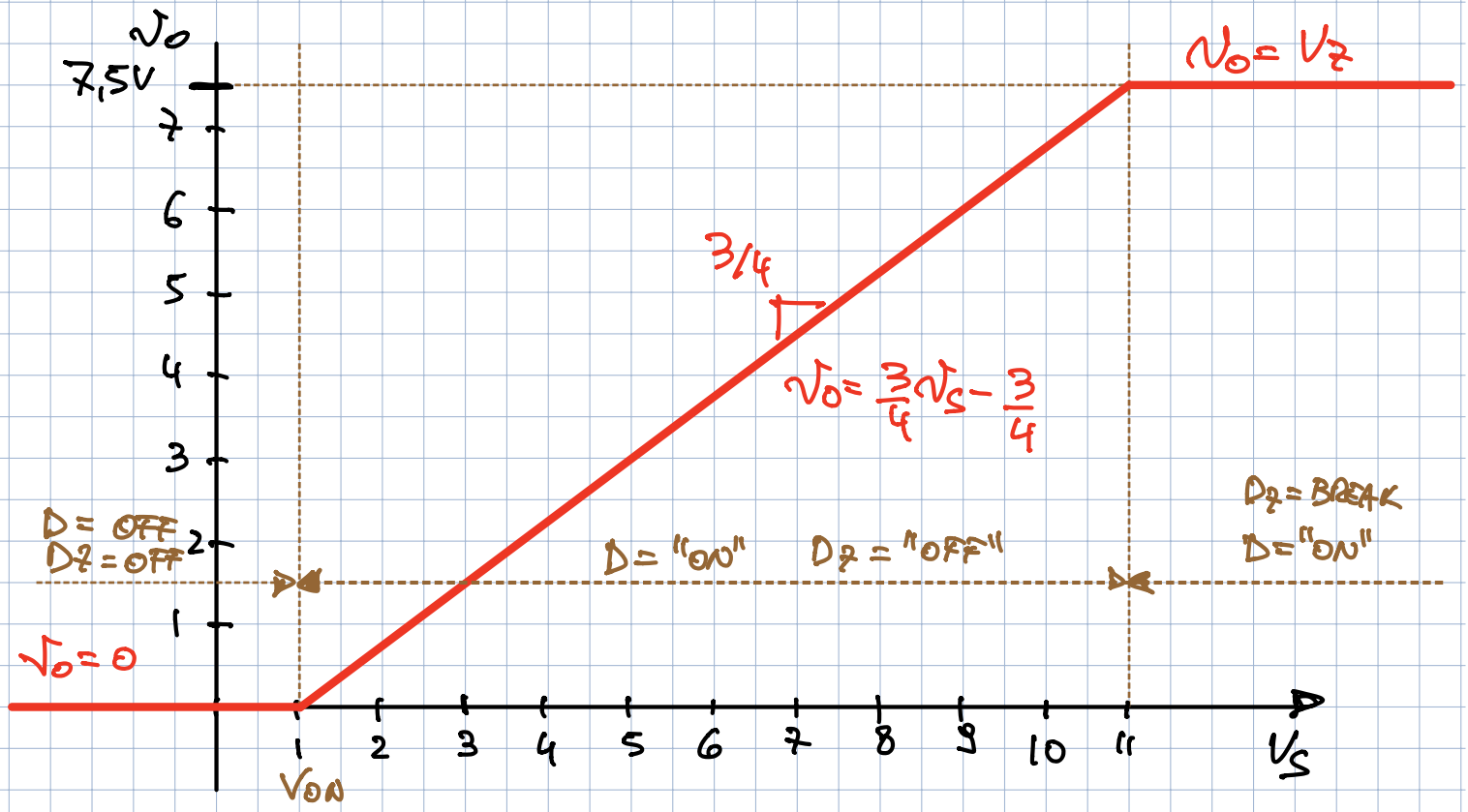

CON $V_S > V_{ON}$ $\Rightarrow$ $D = ON$

Hp $D_Z = OFF$

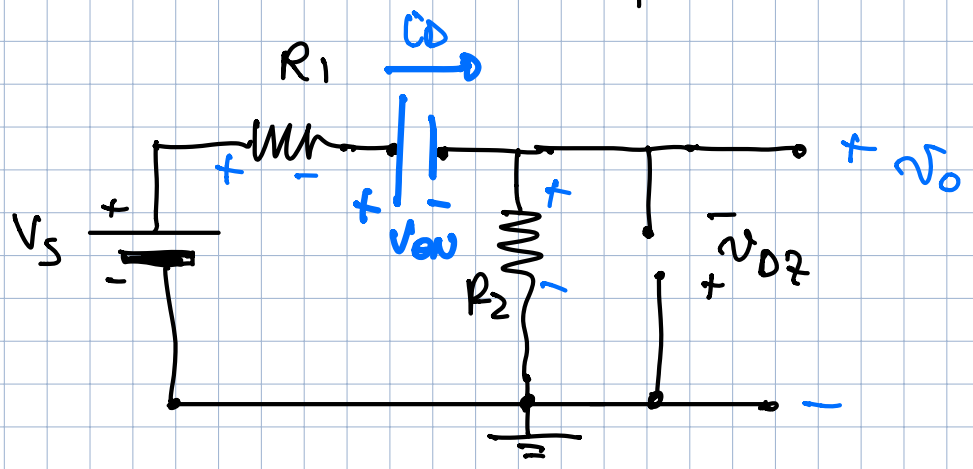

$$i_D = \frac{V_S - V_{ON}}{R_1 + R_2}$$

$i_D > 0 \Rightarrow V_S > V_{ON}$

OK $D =$ "ON"

$$v_O = i_D R_2$$

$$v_O(V_S) = V_S \frac{R_2}{R_1+R_2} - V_{ON}\frac{R_2}{R_1+R_2}$$

$$= V_S \cdot \frac{3}{4} - 1V \cdot \frac{3}{4} = 0{,}75 V_S - 0{,}75$$

$$V_O(V_{ON}) = V_O(1V) = 0V$$ OK RACCORDO

$$v_{DZ} = -v_O = -0{,}75 V_S + 0{,}75V$$

CON $V_S > 1V$

$\Rightarrow \underline{v_{DZ} < 0}$

AFFINCHÉ DZ SIA "OFF" (E NON IN BREAKDOWN)

$$v_{DZ} > -V_Z$$

$$\Rightarrow -0{,}75 V_S + 0{,}75 > -V_Z$$

$$\Rightarrow V_S < \frac{V_Z + 0{,}75V}{0{,}75V} = \frac{7{,}5V + 0{,}75}{0{,}75} = 11V$$

V_{TH2}

$$\underline{v_O(V_{TH2}) = 7{,}5V}$$

3) $V_S > V_{TH2}$ $D_Z =$ BREAK

$D =$ "ON"

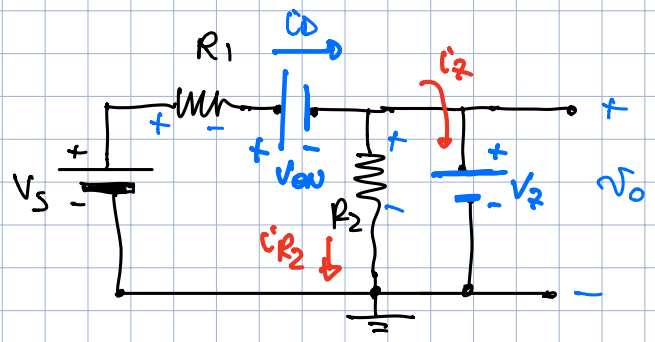

$v_O = V_Z = 7{,}5V$ (OK RACCORDO)

$$i_D = \frac{V_S - (V_Z + V_{ON})}{R_1} \geq 0$$

$V_S > V_Z + V_{ON} = 8{,}5V$ Sì xché $V_S > 11V$!

$$i_Z = i_D - i_{R_2} = \frac{V_S - (V_Z - V_{ON})}{R_1} - \frac{V_Z}{R_2} > 0$$

CONDIZ. X BREAK.

$$\frac{V_S - 8{,}5V}{R_1} - \frac{7{,}5V}{R_2} > 0$$

$$V_S > \left(\frac{8{,}5V}{R_1} + \frac{7{,}5V}{R_2}\right) R_1 = \underline{\underline{11V}} \quad \underline{\underline{OK}}$$